PART DESCRIPTION:	TRANSFORMER	
XMULTIPLE	CUSTOMER'S PART NO: XF-LC24Z321-X503	PART NO: XF-LC24Z321-X503
	REVISION:	REVISION:

1.DIMENSIONS: UNIT: (mm)

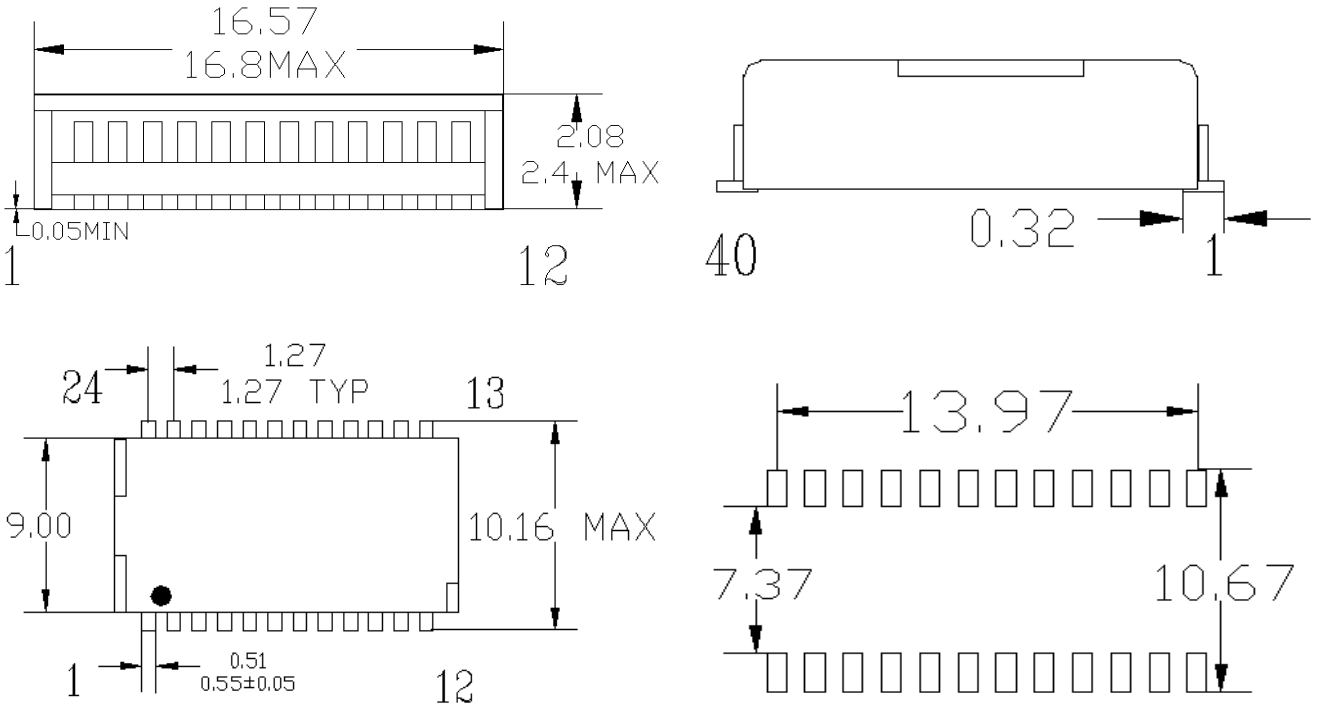

2.SCHEMTIC:

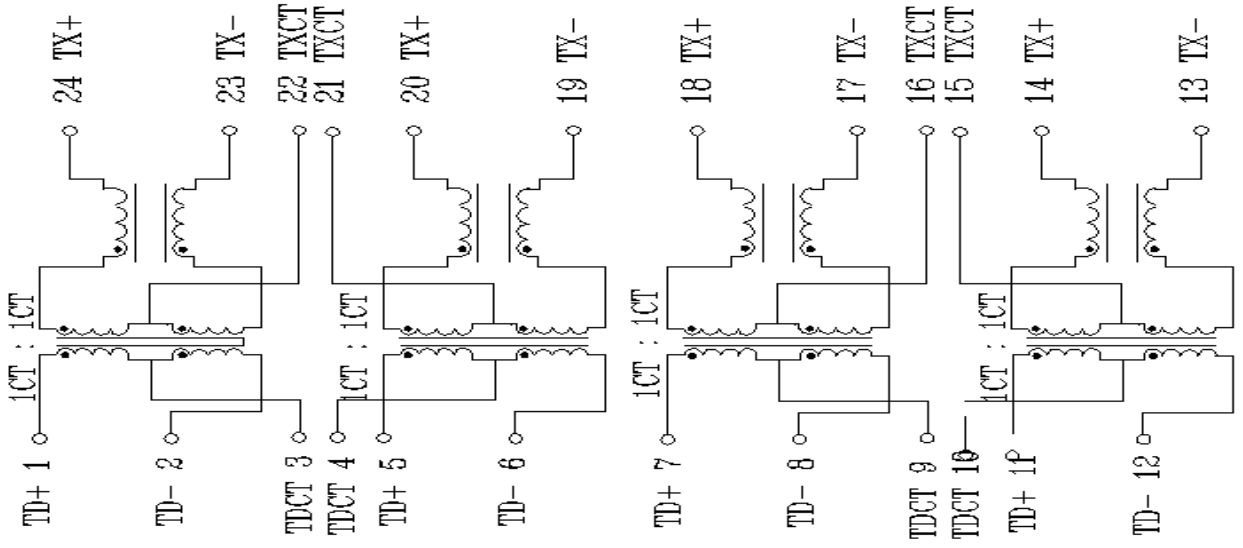

"● ":START WINDING

CUSTOMER APPROVED BY:				
QC CHECKED BY:	APPRD BY:	CHECKED BY:	DESIGNED BY:	DRAWN BY:
廖陆燕 4/2.12	黄志龙	陈妙屏	鲁憧	黄海肖

SHEET 1 OF 5

A	B	C	D

E-90-017-3

PART DESCRIPTION:		TRANSFORMER	
XMULTIPLE	CUSTOMER'S PART NO: XF-LC24Z321-X503	PART NO: XF-LC24Z321-X503	
	REVISION:	REVISION:	

項目 ITEM	規格 SPECIFICA TION	測試條件 TEST CONDITION	儀器 INSTRUMENT
1	L: 1-2=5-6=7-8=11-12=14-13=18-17=20-19=24-23=350uH MIN	100KHZ 0.1V	#HP4284L
2	T/R: 1-2=24-23=5-6=20-19=7-8=18-17=11-12=14-12=1:1±2%	100KHZ 0.1V	#310A
3	DCR: 1-2=5-6=11-12=14-13=18-17=20-19=24-23=1/2 Winding 0.65 OHM MAX	25℃	#502A
4	HI-POT: SEC~PRI	1500VAC 1mA 2SEC	#9301S
5	INSERTION LOSS: -1.2dB MAX	0.1MHz TO 125MHz	#HP8712ET
6	RETURN LOSS: -16dB MIN -10dB MIN	1MHz-40MHz 40.1MHz-100MHz	#HP8712ET
7	CORSS TALK: -45dB MIN -35dB MIN	1MHz 10MHz-100MHz	#HP8712ET
8	DCMR: -42dB typ -37dB typ -33dB typ -12.5dB typ	2MHz 50MHz 100MHz 200MHz	#HP8712ET

CUSTOMER APPROVED BY:

QC CHECKED BY:	APPRD BY:	CHECKED BY:	DESIGNED BY:	DRAWN BY:
廖陆燕 4/2.12	黄志龙	陈妙屏	鲁憧	黄海肖

A	B	C	D
E-90-017-3			

PART DESCRIPTION:	TRANSFORMER				
XMULTIPLE		CUSTOMER'S PART NO: XF-LC24Z321-X503		PART NO: XF-LC24Z321-X503	
		REVISION:		REVISION:	
					QUANTITY:3PCS
TEST ITEM	L	DCR	T/R	HI-POT	INSERTION LOSS
TEST CONDITION	100KHZ 0.1V	25℃	100KHZ 0.1V		0.1MHz TO 125MHz
	1-2=5-6=7-8=11-12 =14-13=18-17=20-19=24-23	1-2=5-6=11-12 =14-13=18-17= 20-19=24-23	1-2=24-23=5-6 =20-19=7-8=18-17=11-12=14-12	SEC-PRI	
SPEC.	350uH MIN	1/2 Winding 0.65 OHM MAX	1:1±2%	1500VAC 1mA 2SEC	-1.2dB MAX
GCI'S					
1	559uH	0.68 OHM	1.00	OK	-1.8
2	630	0.690	1.00	OK	-1.6
3	570	0.750	1.00	OK	-1.9
CUSTOMER APPROVED BY:					
QC CHECKED BY:	APPRD BY:	CHECKED BY:	DESIGNED BY:	DRAWN BY	
廖陆燕 4/2.12	黄志龙	陈妙屏	鲁憧	黄海肖	
A	B	C	D		
				Sheet：3 of 5	
E-90-017-3					

PART DESCRIPTION:	TRANSFORMER	
XMULTIPLE	CUSTOMER'S PART NO: XF-LC24Z321-X503	PART NO: XF-LC24Z321-X503
	REVISION:	REVISION:

QUANTITY:3PCS

TEST ITEM	RETURN LOSS		CORSS TALK		DCMR			
TEST CONDITION	1MHz-40MHz	40.1MHz-100MHz	1MHz	10MHz-100MHz	2MHz	50MHz	100MHz	200MHz
SPEC.	-16dB MIN	-10dB MIN	-45dB MIN	-35dB MIN	-42dB typ	-37dB typ	-100dB typ	-200dB typ
GCI'S								
1	-9	-5	-35	-25	-57	-48	-92	-196
2	-12	-8	-40	-28	-55	-45	-102	-208
3	-9	-7	-37	-32	-51	-44	-98	-201

CUSTOMER APPROVED BY:				
QC CHECKED BY:	APPRD BY	CHECKED BY:	DESIGNED BY:	DRAWN BY:
廖陆燕 4/2.12	黄志龙	陈妙屏	鲁憧	黄海肖
A	B	C	D	

Sheet：4 of 5

E-90-017-3

PART DESCRIPTION: TRANSFORMER		
XMULTIPLE	CUSTOMER'S PART NO: XF-LC24Z321-X503	PART NO: XF-LC24Z321-X503
	REVISION:	REVISION:

QUANTITY:3PCS

TEST ITEM	A	B	C	D	E	F	G
SPEC	16.57 MAX	10.16MAX	2.08	0.51	1.27		
GCI'S	16.8 MAX		2.4 MAX	0.55±0.05	1.27 TYP		
1	16.64	9.75	2.24	0.53	1.27		
2	16.65	9.74	2.29	0.55	1.24		
3	16.62	9.72	2.33	0.55	1.26		

CUSTOMER APPROVED BY:

QC CHECKED BY:	APPRD BY:	CHECKED BY:	DESIGNED BY:	DRAWN BY:
廖陆燕 4/2.12	黄志龙	陈妙屏	鲁憧	黄海肖
A	B	C	D	

Sheet：5 of 5

E-90-017-3