PRODUCT NO.	HOUSING P/N	SUB-ASS'Y P/N	SHIELD P/N	LOGO	REMARK
9740-6X1X-SD	77016-006	5021-8X1X	8119-600D		NON-FILTER/NON-PANEL GROUND
9740-6X1X-SD-A	77016-006	5021-8X1X	8119-601D		NON-FILTER/PANEL GROUND
9740-6X1X-SD-B	77016-006	5021-8X1X-A	8119-600D		FILTERED/NON-PANEL GROUND
9740-6X1X-SD-C	77016-006	5021-8X1X-A	8119-601D		FILTERED/PANEL GROUND

MATERIALS:

- HOUSING-PBT POLYESTER UL94V-0
  MIXED GLASS FIBER.
  STANDARD COLOR-BLACK
- CONTACTS-0.35mm THICK PHOS-BRONZE PLATED
  WITH 6u" HARD GOLD AND gold flash
  IN SOLDER AREA.
- SHIELD-0.25mm THICK COPPER ALLOY,
  NICKEL PLATED.
- FILTER-HIGH IMPEDANCE , HIGH RESISTIVITY , FERRITE BLOCK

Impedance Characteristic:

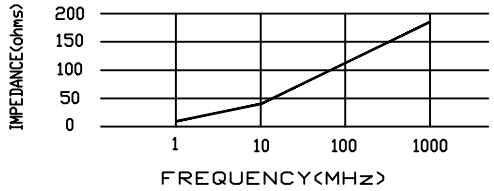

CAVITY CONFIRMS TO FCC RULES AND REGULATIONS PART 68,SUBPART F.

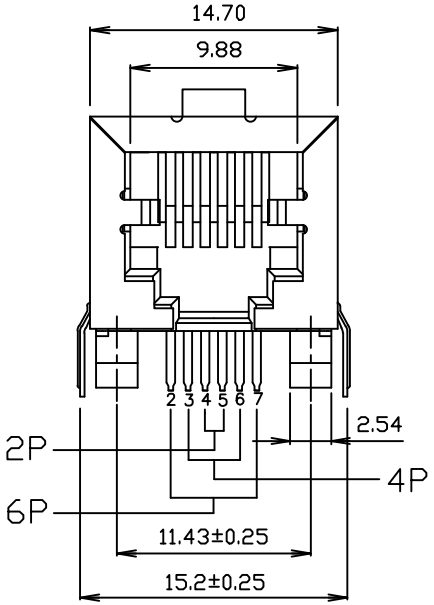

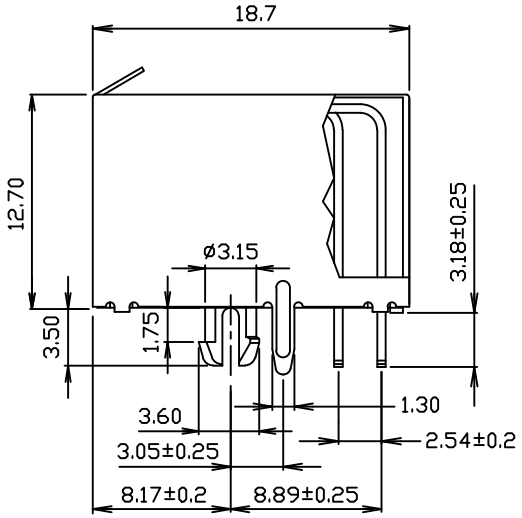

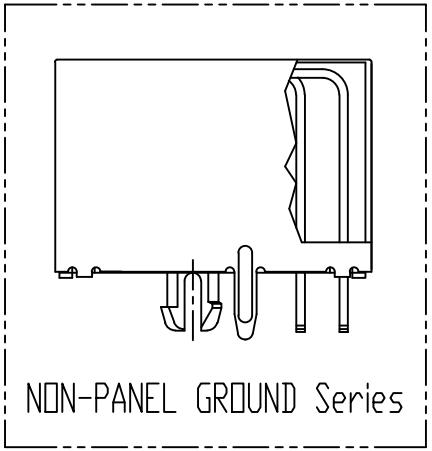

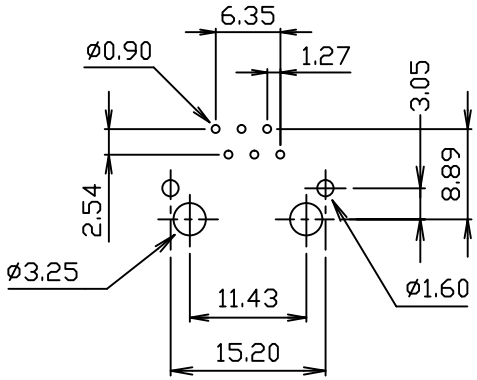

PC Board Layout

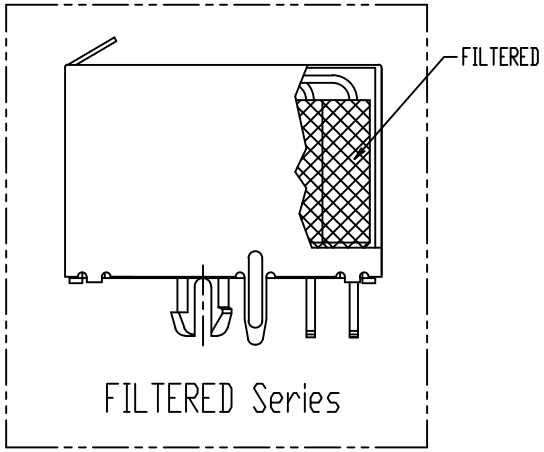

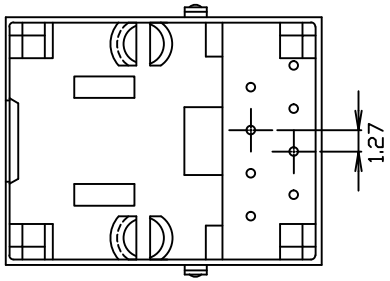

DO NOT SCALE DRAWING	TOLERANCES UNLESS OTHERWISE NOTED	INCH	MM	DR. M.L.HUANG	DATE NOV-27 '00	Xmultiple		
THIRD ANGLE PROJECTION	LINEAR MM / INCH	00 ± .01 000 ± .005 0000 ± .002	0.0 ± 0.25 0.00 ± 0.13 0.000 ± 0.05	CK'D M.CHANG	NOV-27 '00	TITLE 6POS SHIELDED FILTERED & FILTERLESS SIDE ENTRY PCB JACK		
MM INCH	ANGLE ± 0° 30′	RADII	+ 0.40 − 0.15	APP'D W.J.YANG		SCALE SIZE DWG.NO. XMK-9740-6614-SD	REV. 1	SHEET 1